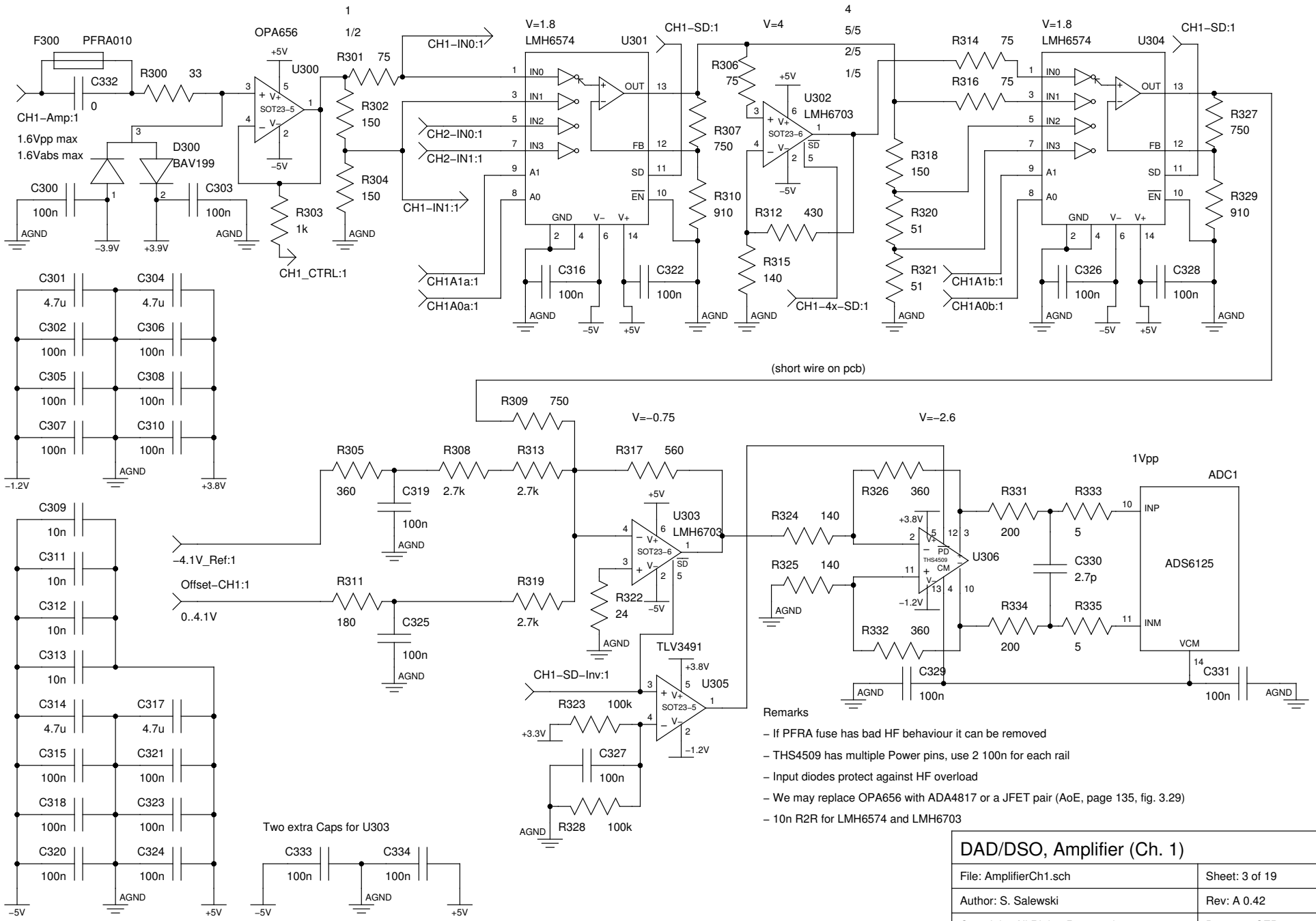

DAD/DSO, Amplifier (Ch. 1)	
File: AmplifierCh1.sch	Sheet: 3 of 19
Author: S. Salewski	Rev: A 0.42
Copyright: All Rights Reserved	Date: 18−SEP−2009