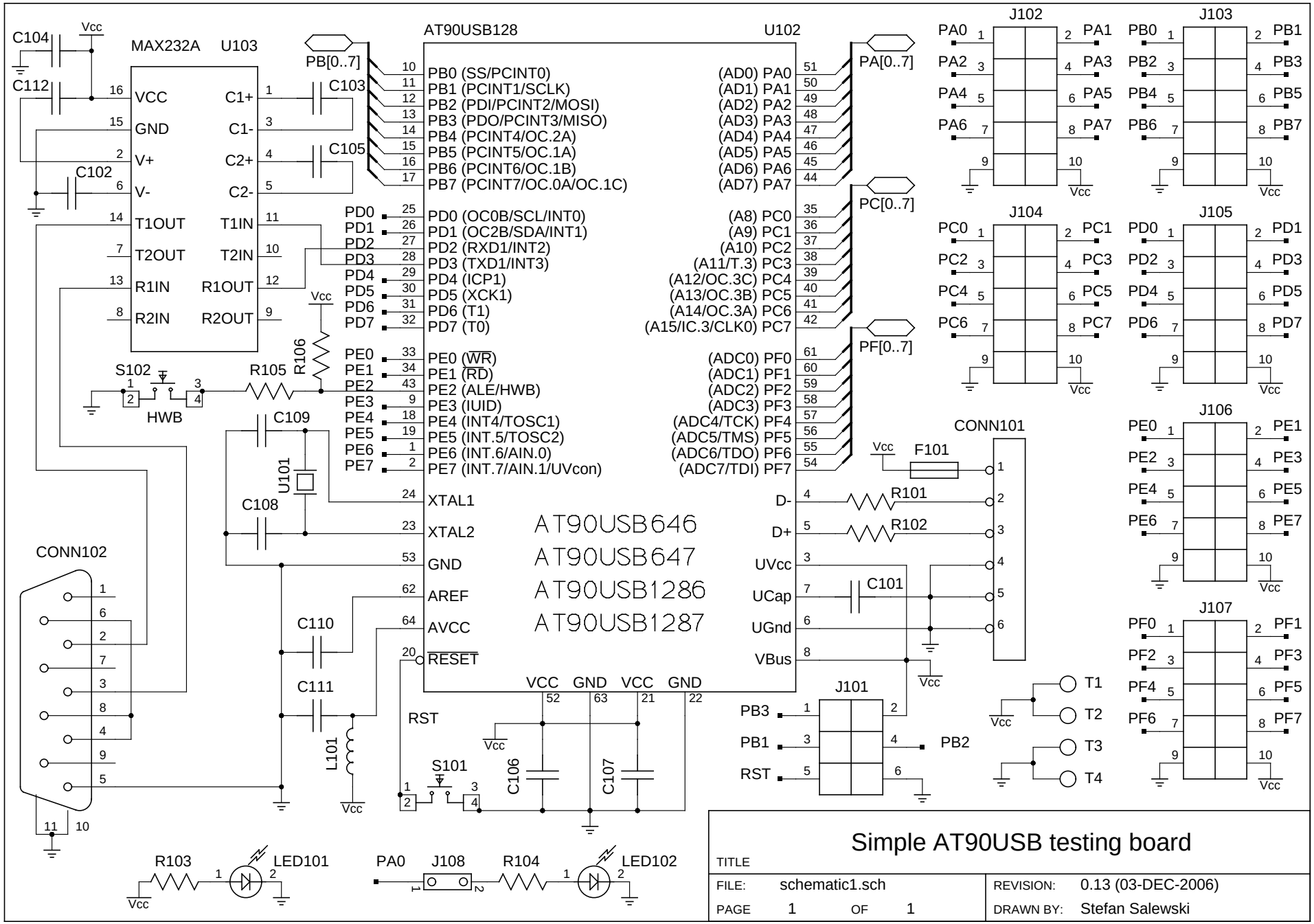

Simple AT90USB testing board

TITLE

FILE:	schematic1.sch	REVISION:	0.13 (03-DEC-2006)
PAGE 1	OF 1	DRAWN BY:	Stefan Salewski